RAPTOR R
Body Assembly

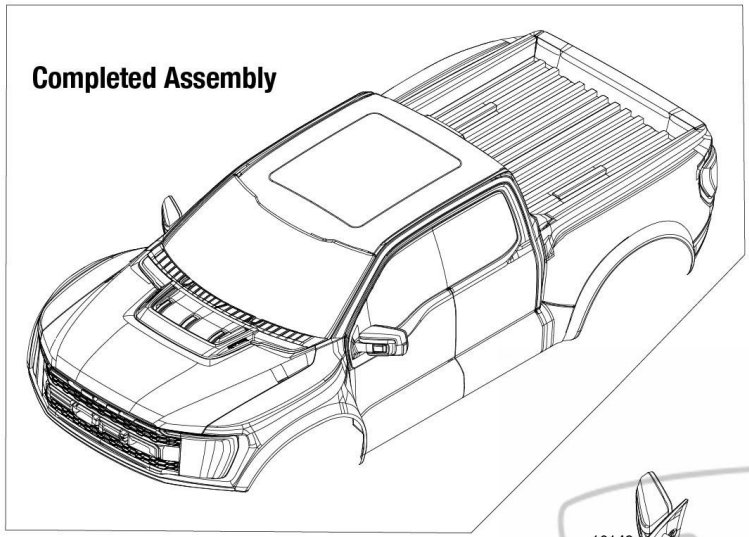

10144
10144
10121
10142
10143
10112-BLUE
10112-BLK
10112-RED
10111 opt.
2577
3x10 BCS
10121
2577
3x10 BCS
2577
3x10 BCS
2577
3x10 BCS
2577
3x10 BCS
10143
2593
3x14 BCS
10143
10144
2576
3x8 BCS
2576
3x8 BCS
10142
2577
3x10 BCS
2577
3x10 BCS
10120
10120
2577
3x10 BCS
2577
3x10 BCS
2577
3x10 BCS
2576
3x8 BCS
2576
3x8 BCS
2576
3x8 BCS

Michael's Hot Rod SHOP
Quality Parts — Service

Specifications on this page are subject to change without notice. Every attempt has been made to ensure the accuracy of this drawing; however, Traxxas cannot be held responsible for typographical or other errors.

REV 230908-R06

See Parts List for a complete listing of optional accessories.

RAPTOR R

Chassis Assembly

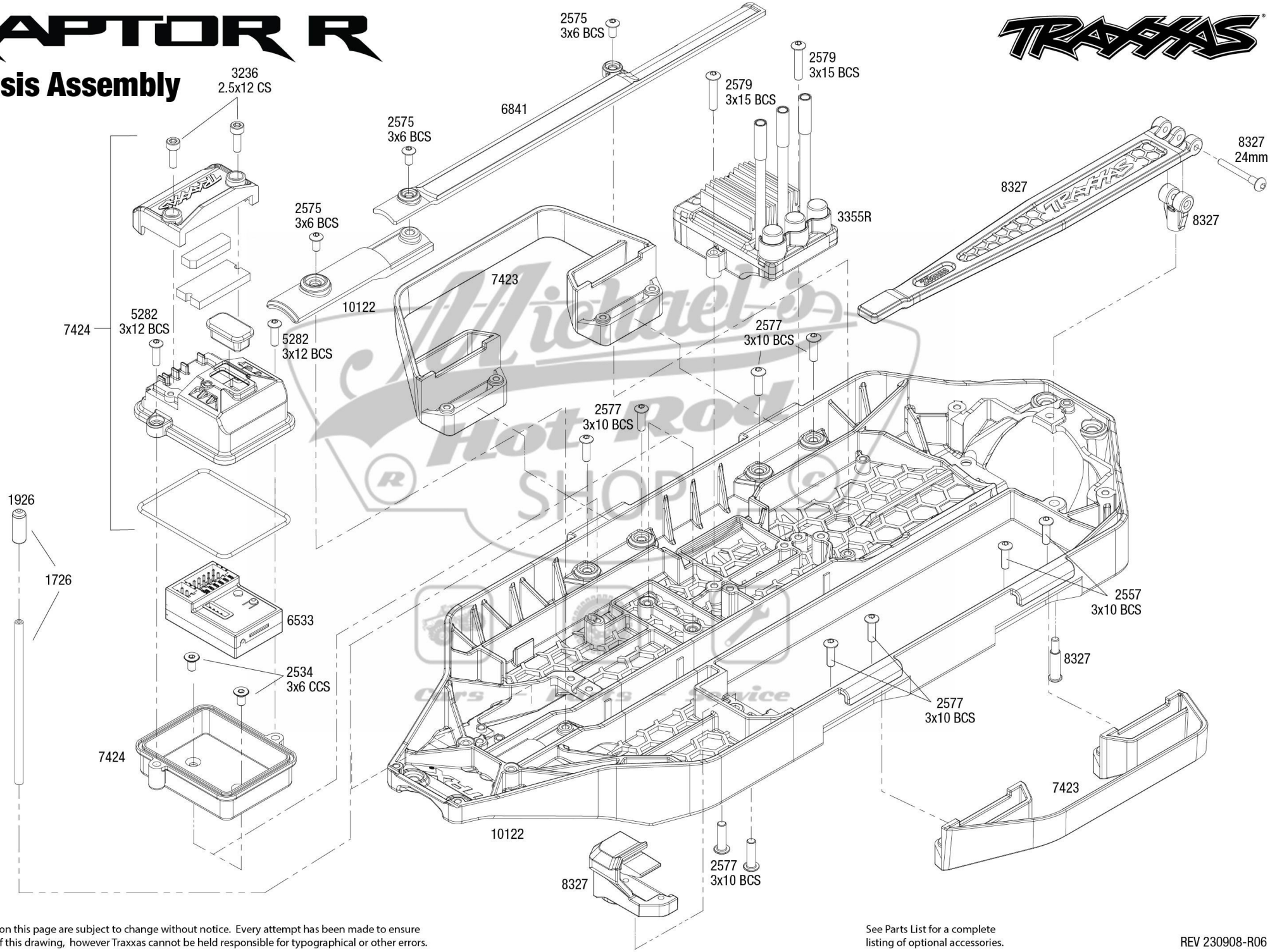

Specifications on this page are subject to change without notice. Every attempt has been made to ensure the accuracy of this drawing, however Traxxas cannot be held responsible for typographical or other errors.

See Parts List for a complete listing of optional accessories.

REV 230908-R06

RAPTOR R

Driveshafts

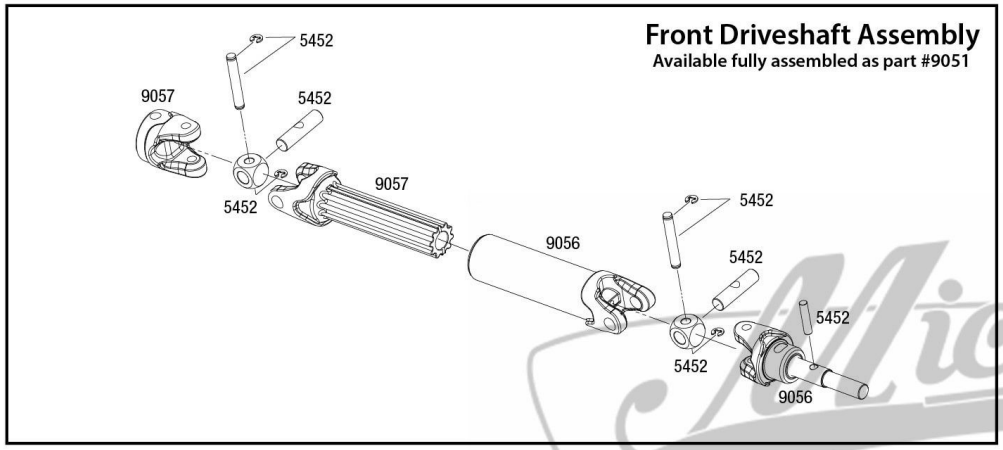

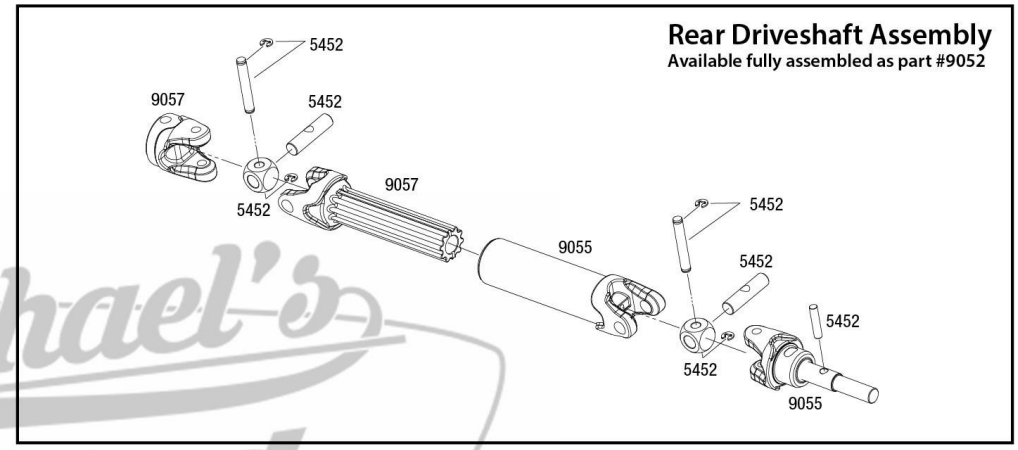

Modular Assembly

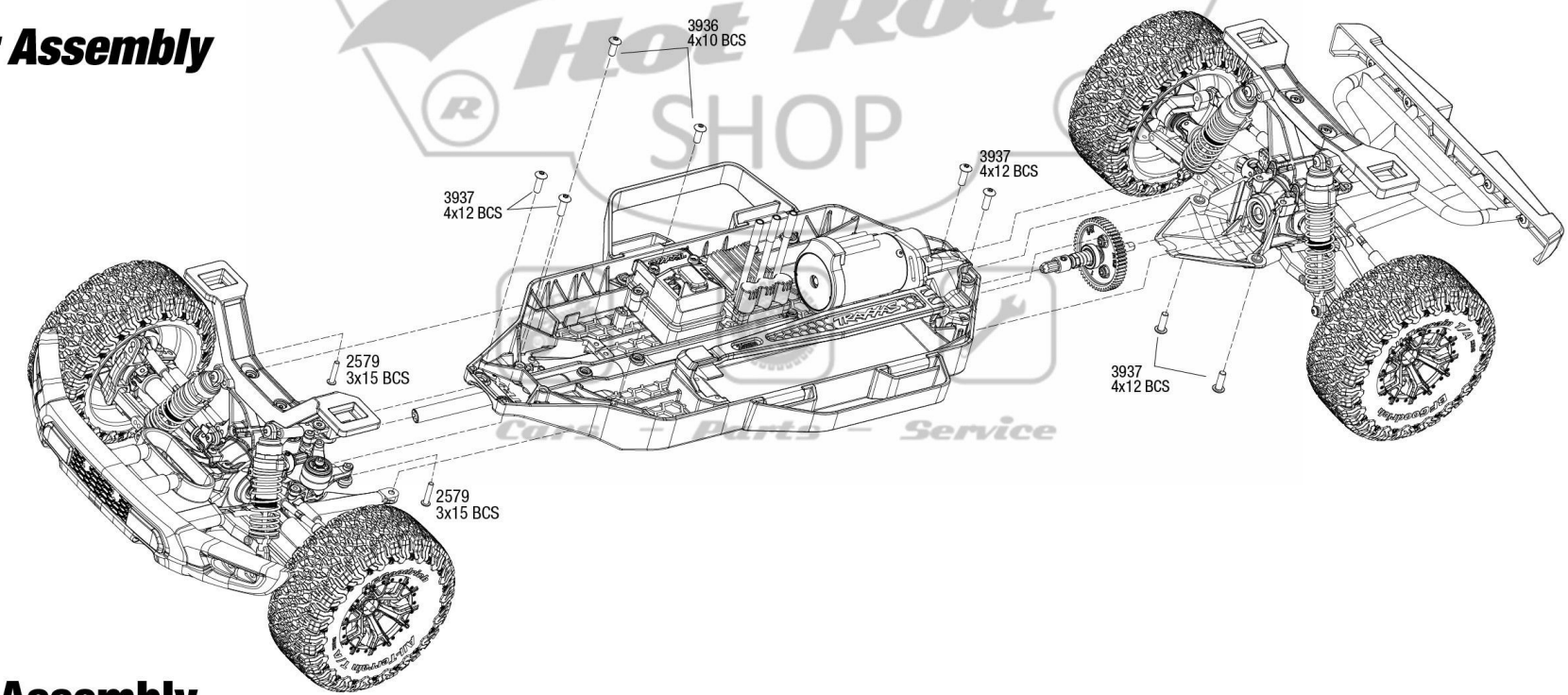

Driveshaft Assembly

RAPTOR R™

REV 230908-R06

Specifications on this page are subject to change without notice.
Every attempt has been made to ensure the accuracy of this drawing, however Traxxas cannot be held responsible for typographical or other errors. See Parts List for a complete listing of optional accessories.

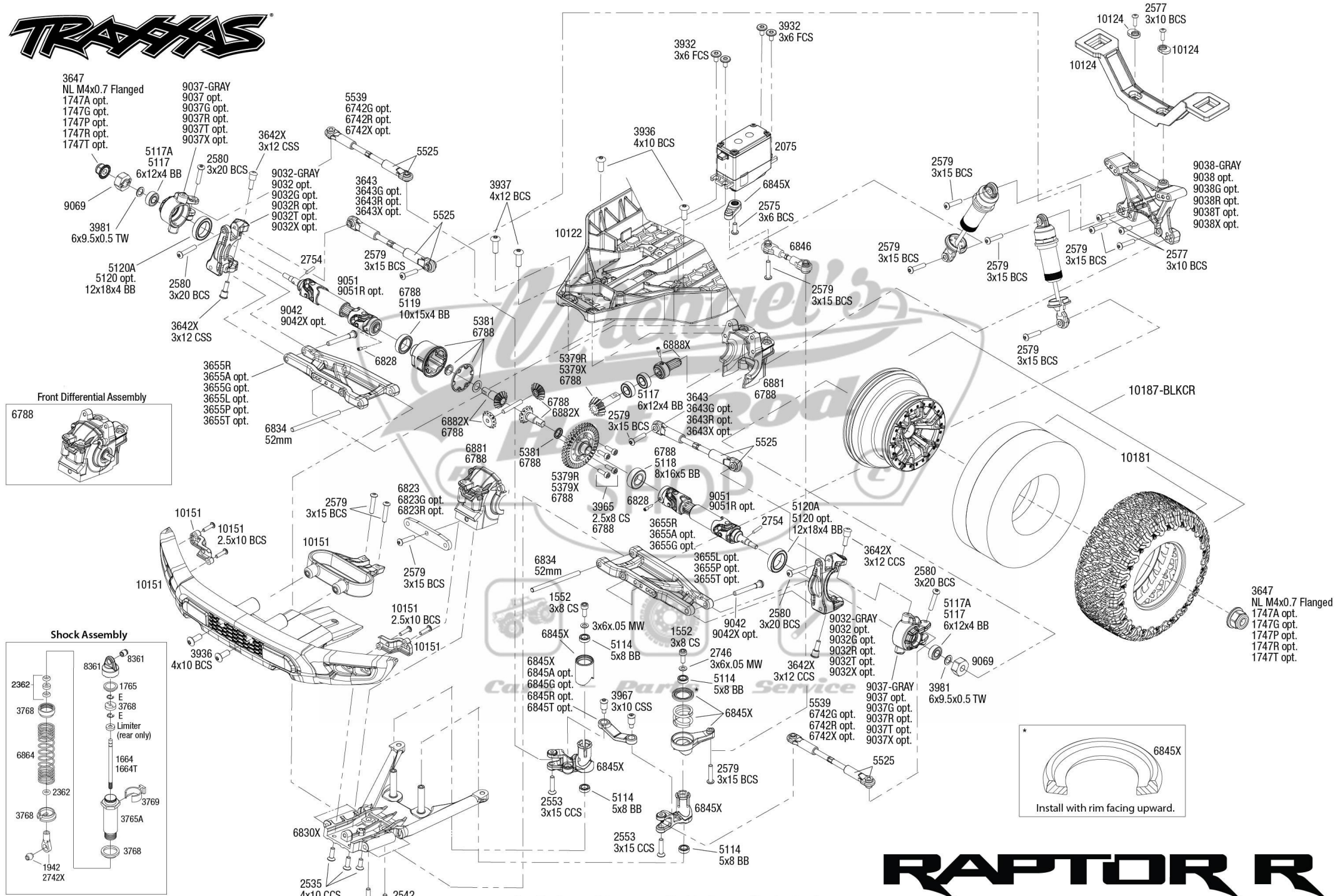

REV 230908-R06

See Parts List for a complete listing of optional accessories.

Specifications on this page are subject to change without notice. Every attempt has been made to ensure the accuracy of this drawing, however Traxxas cannot be held responsible for typographical or other errors.

RAPTOR R

Front Assembly

RAPTOR R

Rear Assembly

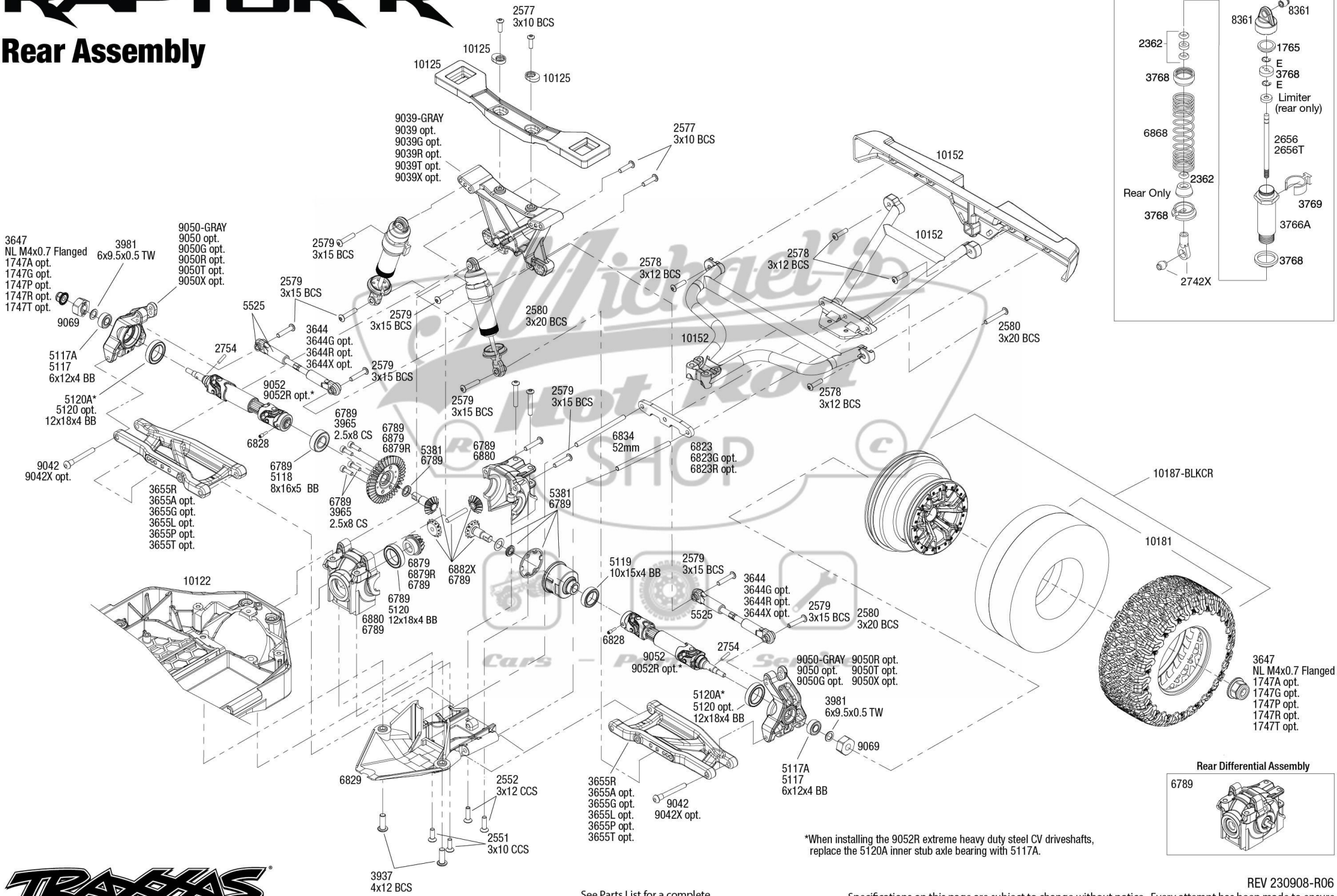

*When installing the 9052R extreme heavy duty steel CV driveshafts, replace the 5120A inner stub axle bearing with 5117A.

See Parts List for a complete listing of optional accessories.

REV 230908-R06

Specifications on this page are subject to change without notice. Every attempt has been made to ensure the accuracy of this drawing, however Traxxas cannot be held responsible for typographical or other errors.

RAPTOR R

Transmission Assembly

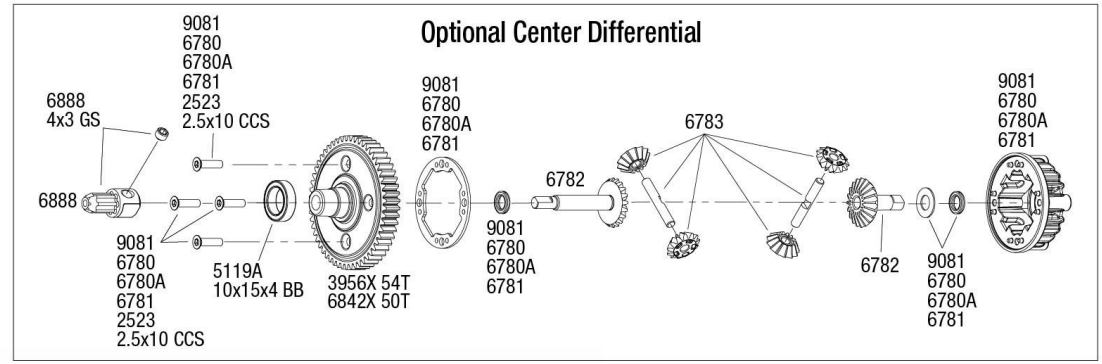

2575
3x6 BCS

6877
6877A opt.

3943X
2743
3x4 GS

3943X

2550
3x8 CCS

6890
6890R opt.
6890X opt.

2550
3x8 CCS

6860A
3932
3x6 FCS

6860A
6860R
2534
3x6 CCS

6860A
6860R

6860A
2745
3.0 NL

2577
3x10 BCS

9090X

3351R

5142
3x15 CS

3354R

5119
10x15x4 BB

3x8 BCS

2577
3x10 BCS

6860A
6860R opt.

6893
5552X

6893

5556
5351 opt.

5552X
5352X opt.

5556
5351 opt.

10122

6893
6893G opt.
6893X opt.

10155

5116
5x11x4 BB

3956 54T
6842 50T opt.
6843 52T opt.

6888
4x3 GS

6888

5552X

2554
3x6 CS

5552X
5.0L

6829

3937
4x12 BCS

Michael's Hot Rod SHOP
Car Parts Service

See Parts List for a complete listing of optional accessories.

REV 230908-R06

Specifications on this page are subject to change without notice. Every attempt has been made to ensure the accuracy of this drawing, however Traxxas cannot be held responsible for typographical or other errors.